origo

お父さんこだわりの塩
焼肉屋
Electric Grill

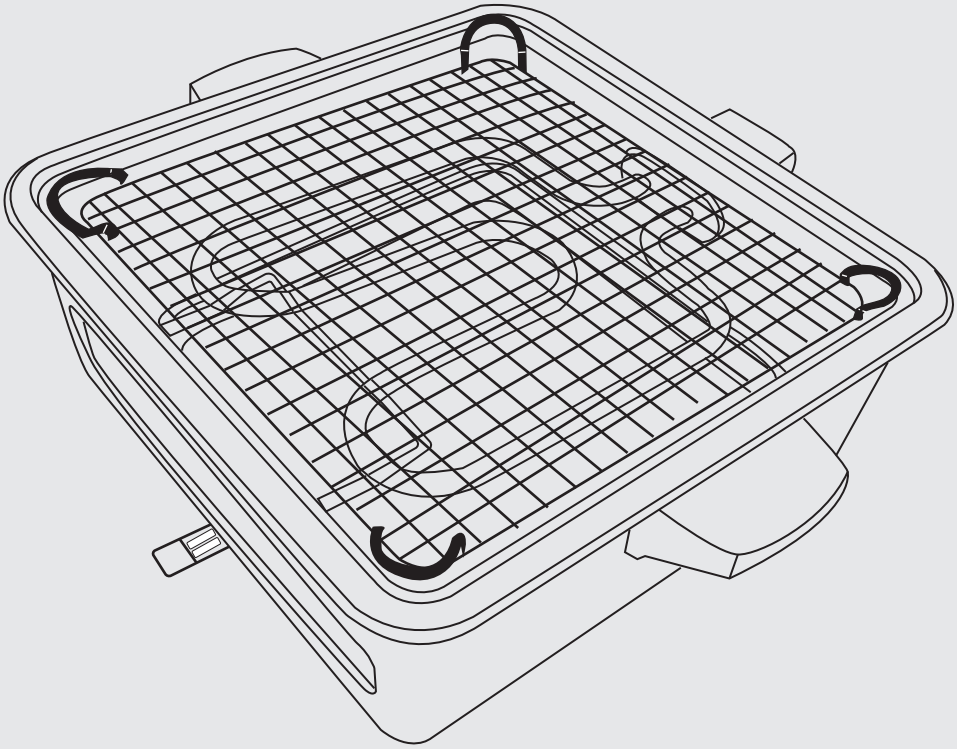

# EG803
# 使用說明書
# Instruction Manual

- 使用產品前，請先細閱本使用說明書，並請妥善保存以便將來翻閱。
- 本說明書及其修正版本（如有）可於本公司網站www.origin.hk下載 。
- 本說明書所載的功能、外觀、圖片及數據皆以實物為準。
- Read all instructions before using the product. Keep this manual for future reference.
- This instruction manual is also available at www.origin.hk.
- In case of any discrepancies between this manual and the actual product—such as functions, drawings, photos, or data—the actual product shall prevail.

- 本機不是為體質、感覺或智力有障礙人士包括小孩或缺乏經驗及知識者使用，除非他們曾經接受負責安全人士的監督或指示。大人應指導小孩不可把玩電器。

  This appliance is not intended for use by persons (including children) with reduced physical, sensory or mental capabilities, or lack of experience and knowledge, unless they have been given supervision or instruction concerning use of the appliance by a person responsible or their safety. Children should be supervised to ensure that they do not play with the appliance.

- 本產品是家用或在類似環境使用，例如:商店內部、辦事處以及其他類似工作環境的廚房區域、農舍、客戶在旅館、汽車旅館和其他住宅類型的環境。

  This appliance is intended to be used in household and similar applications such as: staff kitchen areas in shops, office and other working environments; farmhouses; by clients in hotels; motels and other residential type environments; bed and breakfast type environments.

- 本機不能用於附加外置的時計或控制器。

  Appliances are not intended to be operated by means of an external timer or separate remote-control system.

- 使用時確保本品放置於安全、平穩的表面上。

  Ensure the appliance is placed on a stable, secure surface to eliminate the possibility of tipping over or avoid any water in the set.

- 使用本產品前，請確定規格標貼上所示的額定電壓與當地供電電壓相同。如有疑問可向供應商查詢。

  Before using the appliance, check if the voltage marked on the rating label corresponds to the mains at your home.

- 電源線或保險線損壞時，不應自行更換。應到指定維修中心更換相同或更高規格的電源線或更換保險線。

  To prevent the risk of electric shock, DO NOT USE the set with broken power supply wires, broken fuse or broken plug. All repair works must be made by a professional (authorized distributor). NEVER TRY TO REPAIR the cable or plug by yourself. Please take the damaged set to your local authorized maintenance center.

- 本產品不應使用延長線與標稱小於13A的插座，必須使用與原裝同規格之電線。

  Use of an extension cord is not recommended as it may overheat and cause risk of fire. Must use the same specification power cord with the original power cord.

- 打開包裝，檢查產品。如發現產品有損壞，請勿使用及即時聯絡供應商。

  Open the package and ensure that the appliance is undamaged. In case of doubt do not use the appliance and contact your supplier.

- 防止電插座負荷過重或損害保險線，高耗電量之電器不能同時接駁到同一電插座或同一線路。
  To prevent overloading and blowing fuses, ensure that no other high power appliance is plugged into the same socket, or another socket which is connected in the same circuit.
- 切勿於水源或易燃物品附近使用。
  DO NOT OPERATE this appliance near water sources or flammable liquids.
- 使用時，切勿把本產品放置於火爐或發熱的物體附近。
  This appliance cannot be used beside the stove and other high temperature objects.
- 電源線切勿靠近火源、高溫或隱藏在地毯之下，亦不可靠近水源。
  DO NOT PUT the cord under the carpet, blankets. Always keep the power cable away from the walk way in room.
- 不可在潮濕或有積水的環境使用，不可將本機放於浴缸或大型溶器上面。
  The appliance is not intended for use in wet or damp locations. Never locate the appliance where it may fall into a bathtub or other water container.
- 切勿於高溫表面上或附近使用本產品。
  DO NOT OPERATE this appliance on or near any hot surface.
- 為防止損害電源線，請勿把電源線掛放在檯邊上或接觸發熱的物體。
  Do not hang the power cord on the edge of table or touch the surface with high temperature in order to avoid damage to the power cord.
- 使用本產品時，燒烤爐必須放上食物，不可進行乾燒。此舉將嚴重縮短產品使用壽命。
  Do not allow to turn on this appliance if you have not place any food on it.
- 所有未開封的密封包裝食品(例如:罐頭)，不可使用本產品直接進行加熱，避免發生危險。
  To avoid any danger of explosion, please do not heat the canned goods before remove their cover.
- 請勿將產品放在桌布或窗簾等可燃物料上或附近上使用。使用時不應靠近牆角，其周圍20厘米內不應放置其他易燃物品，免溫度過高引起爆裂、變形、變色等。
  In order to prevent any accident, do not place the appliance on or near combustible materials such as a tablecloth or curtains. Do not operate this appliance near water sources or flammable liquids within 20 cm.
- 首次使用時，會有短暫時間的煙霧冒出，並有輕微異味。此種現象屬正常，請不用擔心。
  For first time operation, there will have some smoke or smell. This situation happens properly. Don't worry about that.
- 在本產品冷卻前，切勿接觸其發熱表面。
  Never try to touch the hot surface of this appliance before it is cool down.
- 本產品使用時間較長後，表面顏色有所變化，這是正常現象。
  If this appliance is using very long time, the surface of appliance will become fade, this situation also happens properly.

- 切勿把盛油/水盤作燒烤盤使用。不可把盛油/水盤直接放在明火或發熱線上加熱。
  Never use the grease water tray as a grill tray. Do not place the grease/water tray directly on the fire or heating element.
- 燒烤前取出盛油/水盤，加入適量的水，然後放回燒烤爐裡發熱線下方。使用燒烤爐時，切勿離開你的視線。若要離開，請先關掉燒烤爐。
  Before grilling, fill the grease/water tray with water, then place it back below the heating element. When the Grill is in use, do not leave your eye sight. If you want to leave, please turn off the Electric Grill first.
- 使用初期，機件上的機油會冒煙。若油脂滴到黏附在燒烤架、發熱線或盛油/水盤上的食物碎屑上，會短暫冒煙或閃出火花，此乃屬正常現象。
  There will be smoke from parts for initial use. If grease drips onto food crumbs stuck to the Grill, heating elements, or grease/water tray, it may smoke or generate sparks briefly. This is a normal phenomenon.
- 烹飪過程中和烹飪後，燒烤爐和盛油/水盤會變得很燙，因此請小心不要燙傷。
  The Electric Grill and grease/water tray will be very hot during and after cooking, so be careful not to get burned.
- 烹調過程中或烹調結束後，請勿移動燒烤爐或將其放置在不穩定的地方。
  Do not move the Electric Grill or place it in an unstable place during or after cooking.
- 燒烤時，除食物以外，請勿使用其他物品(例如: 錫箔紙)完全覆蓋燒烤架。
  When grilling, do not completely cover the grill with anything other than food (for example: tin foil).
- 燒烤過程中，如有太多食物碎屑黏在燒烤架或發熱線上，可先關機清理碎屑後再燒烤。
  When grilling, it too much food crumbs stuck to the Grill or heating element, please turn off the Electric Grill and clean up the crumbs first.
- 請注意不要讓肉類或其他食材沾到發熱線上，燒烤爐會燃燒並冒煙。
  Please be careful not to let meat or other ingredients get on the heating wire. It will burn and smoke.
- 切勿將任何鍋具直接放在本產品進行加熱，避免發生危險。
  Never place any pot directly on this Electric Grill for heating to avoid danger.
- 使用期間切勿把塑膠或紙質餐具放入燒烤爐。
  Do not put plastic or paper dishware into the Electric Grill and operate.
-
  本產品含有可回收材料，不可把本產品作為未分類廢物。請聯繫當地就近指定回收點。

  This product contains recyclable materials. Do not dispose this product as unsorted municipal waste. Please contact your local municipality for the nearest collection point.

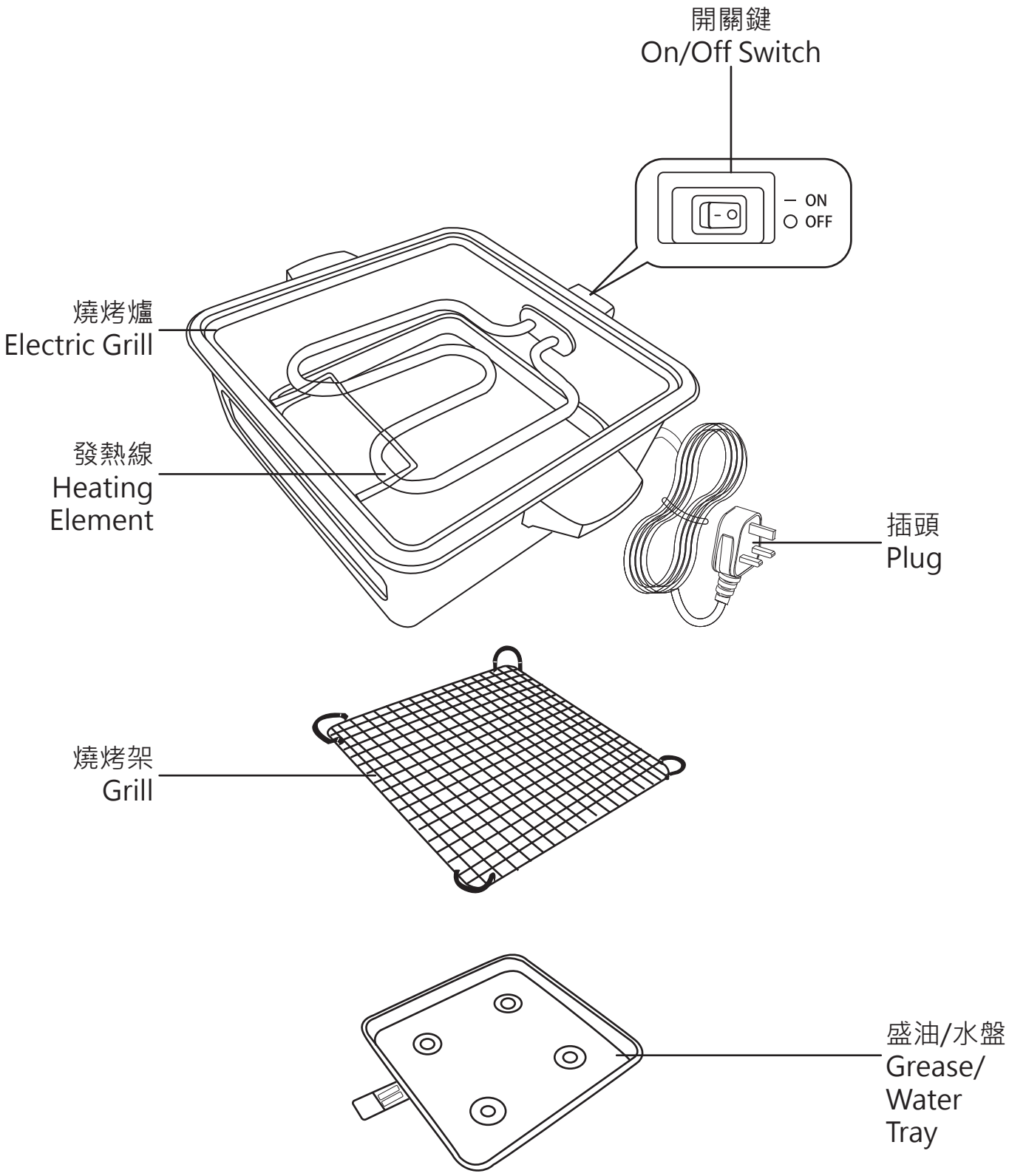


圖片只供參考，一切以實物為準
The picture is for reference only, everything in kind shall prevail.

燒烤 Grill :

❶

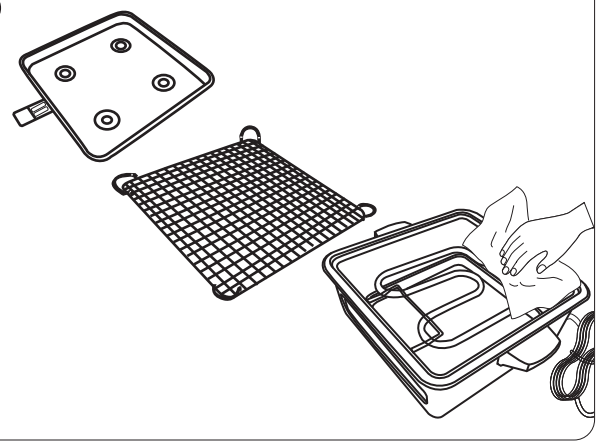

1. 先拿出所有配件，以濕潤毛巾清潔，放置於平坦位置上。使用前請確保已拆除所有包裝物料。

   Take apart all accessories, clean with a soft damp cloth. Place your appliance on the level and stable surface. Make sure that all package materials are removed before use.

❷

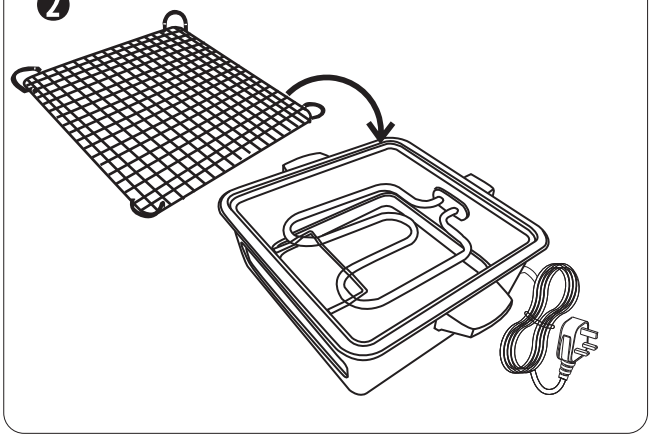

2. 將燒烤爐放在平坦的水平表面上。將燒烤架放置在燒烤爐上面。

   Place the Electric Grill on a flat, level surface. Put grill on top of the Electric Grill.

圖片只供參考，一切以實物為準
The picture is for reference only, everything in kind shall prevail.

❸

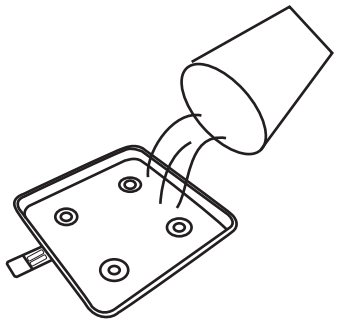

3. 再將適量的水加到盛油/水盤內並不可超過注水線，注水時需確保水位保持在發熱線的下方。

   Fill with tap water up to the fill line in the grease/water tray and make sure the water level remains below the heating element.

❹

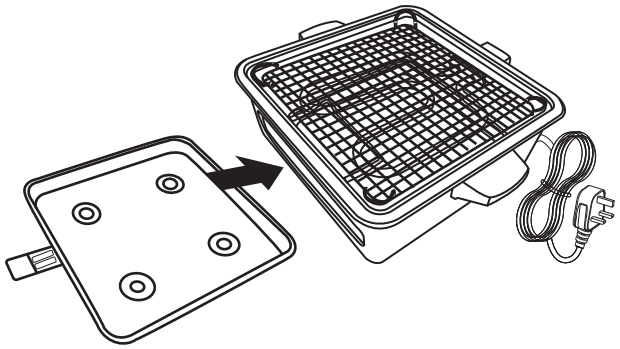

4. 然後將盛油/水盤放回燒烤爐裡發熱線下方(注意：注水時切勿將水滴到發熱線上。)

   Place the grease/water tray back below the heating element. (Note: Please do not drip water onto the heating element.)

燒烤 Grill :

❺

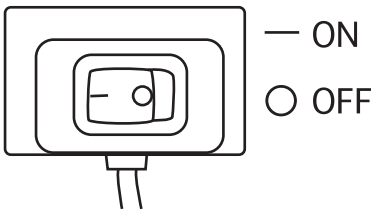


❻

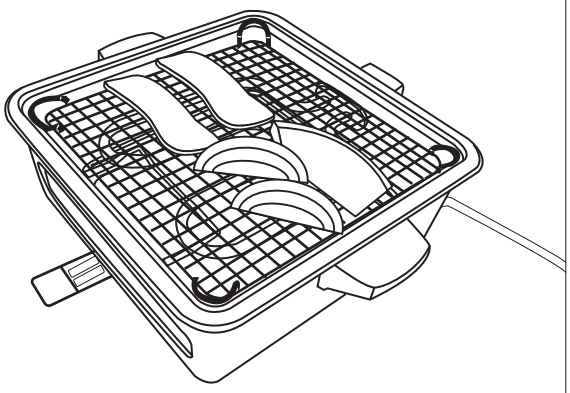

5. 將插頭插入交流電220-240伏特，50/60赫茲的獨立插座，燒烤爐已可使用。把開關鍵從 O 調至 — ，指示燈會亮起。

   Plug the power plug into an 220-240V~, 50/60Hz electrical outlet, the Electric Grill is ready for use. Turn the switch from O to — and the indicator light is on for working.

6. 使用前，預熱五分鐘，然後放置食物在燒烤架上面。

   After preheating the Electric Grill for 5 minutes, then place any food on grill under the heating element according to different heat of cooking request.

圖片只供參考，一切以實物為準
The picture is for reference only, everything in kind shall prevail.

注意: 第一次使用燒烤爐，先預熱10分鐘(切勿放上任何食物)。燒烤爐可能會出現少量冒煙及氣味約60秒，因為本產品在生產時發熱線帶有一層保護油，此乃正常現象。

Caution: Before using for the first time, operate the appliance for 10 minutes without any food. There will have some smoke or smell for about 60 seconds. Because this Electric Grill have some protective oil on the surface of the heating element during production.

對於帶有醬汁的食材，請在燒烤前瀝乾水分。

For ingredients with sauce, please drain them before grilling.

7. 燒烤完畢後，把開關鍵調至 O 位置，再拔掉插頭。

   When finished using the Electric Grill, turn the switch to O position and unplug it from the socket.

8. 待燒烤爐完全冷卻後方可清潔或移動機身。

   Wait until the Electric Grill is completely cool down before moving or cleaning.

注意/CAUTION:

警告: 不使用燒烤爐時，經常保持拔除電源，及切勿將燒烤爐浸於水或其他液體中。在清潔本燒烤爐前，先將燒烤爐關掉及把電源線從插座拔出，然後讓燒烤爐完全冷卻。
WARNING: ALWAYS UNPLUG THE POWER CORD BEFORE MOVING OR SERVICING. DO NOT IMMERSE THE ELECTRIC GRILL IN WATER! BEFORE CLEANING, MAKE SURE THAT THE UNIT HAS BEEN SWITCHED OFF AND IT IS UNPLUGGED FROM THE MAIN OUTLET AND LET THE ELECTRIC GRILL COOL DOWN COMPLETELY.

外殼: 清理時切勿將燒烤爐浸於水或其他液體中。使用濕潤軟布抹擦清潔，頑固污垢可用軟布沾上含肥皂的溫水抹擦。
Housing: Clean the outside and grille of the Electric Grill with a soft cloth. To remove persistent dirt, wipe down with a cloth that has been dampened with warm soapy water.

1. 每次使用後都要清潔燒烤爐。
   Clean the Electric Grill each time .
2. 切勿使用研磨性、腐蝕性或易燃性清潔劑(例如漂白劑或酒精)清潔燒烤爐的任何部位。
   Do NOT use abrasive, corrosive or flammable cleansers (such as bleach or alcohol) to clean any part of the Electric Grill.
3. 請勿使用金屬廚房用具或研磨性清潔材料來清潔燒烤架及盛油/水盤。
   Do not use metal kitchen utensils or abrasive cleaning materials to clean the grill and grease/water tray.
4. 用濕布擦拭燒烤爐的外部。
   Wipe the outside of the Electric Grill with a moist cloth.
5. 請不要將燒烤爐浸入到液體中進行清潔。燒烤架及盛油/水盤可以直接進行清洗，方便衛生。
   Do not immerse the Electric Grill in water to clean.
6. 使用後，燒烤爐內可能會出現小斑點(如啡色、乳白色、黑色等情況)或變色。這是由於食物中所含的油脂引起變化或因污垢積聚太久所致，此屬正常現象。
   After use, some color spots (e.g. brown, milky, black, etc) and discolor may appear in the Electric Grill. This is because of the grease contained in food or the accumulated scale, this situation also happens properly.

提示: 如果污垢粘在燒烤架或盛油/水盤上，請在燒烤架或盛油/水盤中注入一些清洗液。讓燒烤架或盛油/水盤浸泡約10分鐘。
Tip: If dirt is stick to the grill or grease/water tray, fill the grill or grease/water tray with hot water and mild cleaner. Let the grill or grease/water tray soak for approximately 10 minutes.

儲存: 連同使用說明書，把燒烤爐存放於清涼及乾爽的地方。
STORAGE: Store the Electric Grill with these instructions in the original box in a cool and dry place.

# 技術規格
# Specification

| | |
|---|---|
| 型號 Model Number | EG803 |
| 電源 Power Supply | 220-240V~ 50/60Hz |
| 額定功率 Rated Power | 1000瓦特/Watts |
| 淨重 Net Weight | 1300克(gram) (約/Approx.) |
| 產品尺寸 Product Dimension | 260(W) x 105(H) x 270(D) mm (約/Approx.) |

# 源澤地圖
# Origin Map

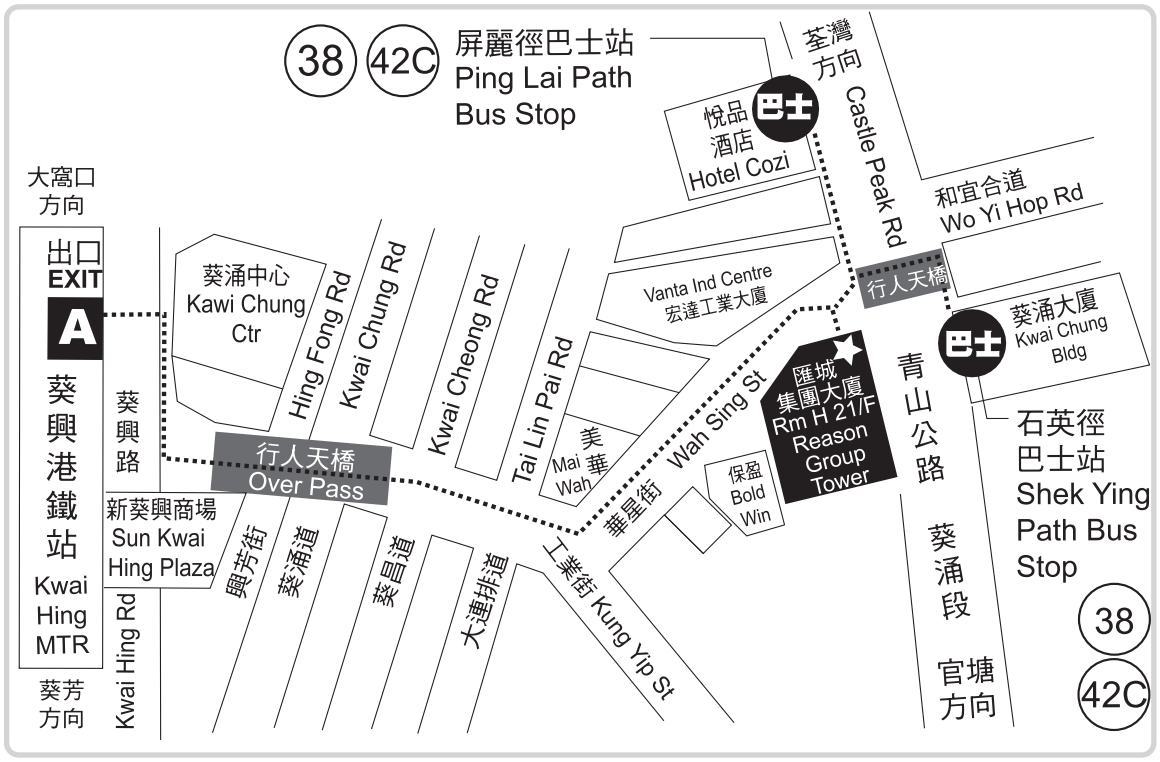


辦公時間
10:30am - 12:30pm (星期一至五)
02:30pm - 05:30pm (星期一至五)
10:30am - 12:30pm (星期六)
(星期日及公眾假期休息)

OFFICE HOURS
10:30am - 12:30pm (Mon to Fri)
02:30pm - 05:30pm (Mon to Fri)
10:30am - 12:30pm (Saturday)
(Closed on Sunday and Holiday)

# 保用

燒 肉 屋
Electric Grill

產品: 燒肉屋

型號: EG803

此產品由購買日期起計算，本公司將根據下列條款及細則，提供一年保養服務(商業用途則為3個月):

1. 於購買後一年內，經本公司技術員判斷為正常運作下損壞之產品，可獲免費維修和/或零件更換。
2. 以下情況不被包括在保養範圍內：
   - 若產品是因為濫用、錯誤使用、疏忽及/或意外而遭致損壞；
   - 未經本公司授權之自行處理、維修及/或改裝；
   - 任何機殼、燒烤架、盛油/水盤、電源線及插頭，以及配件。
3. 需要檢查或維修時，請將產品送往本公司服務中心，並於修理妥當後自行取回。
4. 更換後之任何零件或配件，均屬本公司所有。
5. 本保養服務只適用於香港特別行政區。
6. 顧客必須同時出示零售商之正式發票，方可得到免費維修服務。

**升級保用 : (須於購買本產品後10天內完成以下步驟；升級保用不適用於商業用途 )**

A. 額外3個月保用: 於本公司網站完成登記，可享有共15個月免費保用 ；**或**

B. 額外6個月保用: 到訪並”追蹤”本公司 (Origin Marketing Limited) 的Facebook，即可享有共18個月免費保用。(如果已追蹤，則自動享有此升級保用，毋須再進行上述步驟)。

**服務中心**

**源澤市務有限公司**
**香港新界葵涌青山公路403號(近華星街12號)匯城集團大廈21樓H室**
**www.origin.hk 電郵: info@origin.hk**
**電話: 2156 8238**

www.origin.hk　Find us on　Instragarm

# Warranty

Item : Electric Grill

Model : EG803

This product is warranted for 1 year (commercial use for 3 months) from the date of purchase under the following conditions:

1. For any defect, in the judgment of our technician, if it is caused under normal use, we are responsible for repairing the product, and/or replacing parts at free of charge.
2. This warranty DOES NOT apply to:
   - If the product was damaged by abuse, misuse, negligence or accidents;
   - Repair, alteration/modification by unauthorized technician;
   - The housing, grill, grease/water tray, power cord & plug or accessories.
3. The customer is requested to bring the product to and from our Service Centre.
4. Any parts or accessories, which had been replaced, shall be of our property.
5. This warranty is valid in H.K.S.A.R. only.
6. Original invoice should be presented in order to get free service.

**Extended Warranty: (Complete following procedure within 10 days from the date of purchase. Extended warranty does not apply to commercial use)**

A. Extra 3 months warranty: complete Online Warranty Registration on our website to enjoy a total of 15 months of warranty; or

B. Extra 6 months warranty: follow ” Origin Marketing Limited ” on Facebook to enjoy a total of 18 months of warranty. (If you have already followed, no need to do it again.)

**Service Centre**

**ORIGIN MARKETING LIMITED**
**Unit H, 21/F., Reason Group Tower (nearby 12 Wah Sing Street), 403 Castle Peak Road, Kwai Chung, N.T., Hong Kong.**
**www.origin.hk Email: info@origin.hk Tel: 2156 8238**

www.origin.hk　Find us on　Instragarm