origo

無煙燒烤爐
Smokeless BBQ Grill

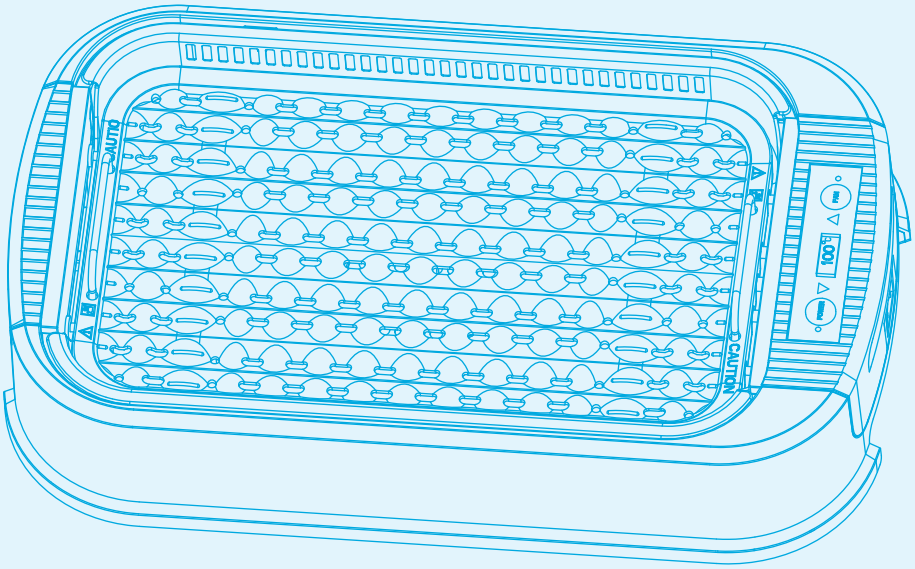

EG7300
使用說明書
Instruction Manual

*使用本產品前，請先細閱使用說明，並請妥善保存以便將來翻閱。
*Read all instructions carefully before using this appliance, and keep this instruction for furture reference when necessary.

重要安全提示
Important Safety Information

無煙燒烤爐
Smokeless BBQ Grill

- 本機不是為體質、感覺或智力有障礙人士或8歲以下小孩或缺乏經驗及知識者使用，除非他們曾經接受負責安全人士的監督或指示，大人應指導小孩不可把玩電器。除非在負責安全人士的監督或指示，8歲以下小孩不可清潔及維護本機。

  This appliance can be used by children aged from 8 years and above and persons with reduced physical, sensory or mental capabilities or lack of experience and knowledge, ifthey have been given supervision or instruction concerning use of the appliance in a safe way and understand the hazards involved. Children shall not play the appliance. Cleaning and user maintenance shall not be made by children unless they are older than 8 and supervised.

- 本機不能用於附加外置的時計或控制器。

  Appliances are not intended to be operated by means of an external timer or separate remote-control system.

- 切勿將包含電器組件和加熱元件的外殼浸入水中，也不要在水龍頭下沖洗外殼。

  Never immerse the housing, which contains electrical components and the heating elements, in water nor rinse it under the tap.

- 在用油/脂肪燒烤時，請勿點燃。

  When roasting with oil / fat, do not let it ignite.

- 請勿用水滅火。萬一發生火災，請關閉設備，斷開燒烤爐與電源的連接，並用濕布或防火毯切斷供氣。

  Do not use water to extinguish the fire. In case of fire, switch off the device, disconnect the BBQ Grill from the power source and cut off the air supply with a damp cloth or fire blanket.

- 切勿在燒烤爐托盤中盛有熱油或其他熱液體。

  Never carry the BBQ Grill with hot oil or other hot liquids in the tray.

- 本機及其電源線應擺放於8歲以下小孩不能觸及的地方。

  Keep the appliance and its cord out of reach of children less than 8 years.

- 如本產品的電源線有損壞痕跡，為保障安全，請立即停止使用並聯絡供應商更換。

  If the supply cord is damaged, it must be replaced by manufacturer, its service agent or similary qualified persons in order to avoid a hazard.

- 切勿使用非本產品提供的組件。

  Do not use components not provided by this product.

- 在烹飪過程中或剛使用後，請勿觸摸烤盤或其他熱表面。

  Please don't touch the Grill Plate or other hot surfaces during cooking or just after use.

- 切勿在本機運行時觸摸本機內部。

  Never touch the inside of the appliance while it is operating.

- 不可在潮濕或有積水的環境使用，不可將本機放於浴缸或大型溶器上面。

  The BBQ Grill is not intended for use in wet or damp locations. Never locate the BBQ Grill where it may fall into a bathtub or other water container.

- 請勿添加燃料，硬煤，木炭，起火劑，汽油，煤油，酒精或其他易燃物。

  Do not add fuel, hard coal, charcoal, fire starters, petrol, kerosene, alcohol or other flammables.

重要安全提示
Important Safety Information

- 打開包裝，檢查產品。如發現產品有損壞，請勿使用及即時聯絡供應商。

  Open the package and ensure that the appliance is undamaged. In case of doubt do not use the appliance and contact your supplier.

- 本產品不適用於室外及作工業用途。

  This appliance is intended for household use ONLY and not for industrial or outdoor use.

- 使用本產品前，請確定規格標貼上所示的額定電壓與當地供電電壓相同。如有疑問可向供應商查詢。

  Before using the appliance, check if the voltage marked on the rating label corresponds to the mains at your home.

- 本產品只可使用附設的電源線。

  This product can only use with the attached power cord.

- 電源線切勿靠近火源，高溫或隱藏在地毯之下。

  Do not put the power cord near fire, hot sources or under carpet.

- 切勿使用電源線把本產品掛起。

  Never hang your appliance on the power cord.

- 選擇一個靠近電源插座的位置，但不要放在有水的地方使用。

  Choose the near part of socket during use. Do not use it near any sources with water.

- 請使用獨立插座。不應使用萬能插頭或拖板或標稱小於13安培保險絲的插座。

  Do not use extension cord. Always operate this roaster on the socket with at least 13A fuse.

- 燒烤爐應放於平穩、耐熱的表面上。

  Please operate this BBQ Grill on a flat and heat-resistant surface.

- 請勿將產品放在桌布或窗簾等可燃物料上或附近上使用。使用時不應靠近牆角，其周圍10cm內不應放置其他易燃物品，免溫度過高引起爆裂、變形、變色等。

  In order to prevent any accident, do not place the appliance on or near combustible materials such as a tablecloth or curtains. Do not operate this BBQ Grill near water sources or flammable liquids within 10cm.

- 當本產品打開或正在冷卻時，請將本產品及其電源線放在15歲以下兒童接觸不到的地方。

  Keep the appliance and its mains cord out of the reach of children younger than 15 years when the appliance is switched on or is cooling down.

- 在清潔設備之前，電烤爐處於冷卻狀態。

  Let the BBQ Grill cool down before clean it.

- 在移動或清潔本產品前，必須先關掉本機及拔除電源插頭。

  Always unplug before moving it and cleaning.

- 本產品含有可回收材料，不可把本產品作為未分類廢物。請聯繫當地就近指定回收點。

  This product contains recyclable materials. Do not dispose this product as unsorted municipal waste. Please contact your local municipality for the nearest collection.

各部名稱
Main Parts

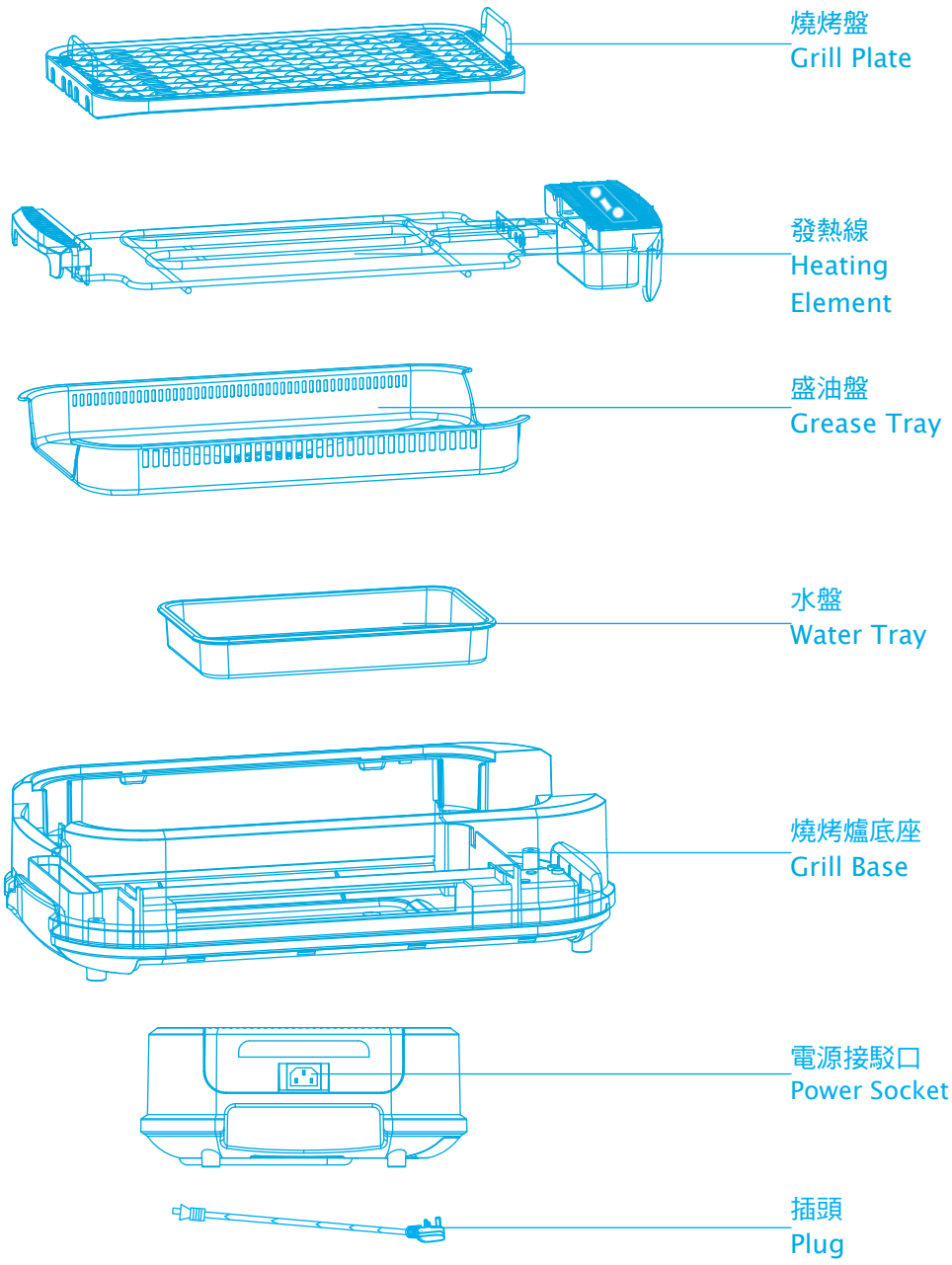

使用前的準備:

1. 先拿出所有配件, 以濕潤毛巾清潔，放置於平坦位置上。
2. 使用前請確保已拆除所有包裝物料。
3. 將底座放在平坦的水平表面上。
4. 再將適量的水加到水盤內並不可超過注水線，注水時需確保水位保持在發熱線的下方，然後放在底座底部。(注意：注水時切勿將水滴到發熱線上。)
5. 將盛油盤放在底座上，對準盛油盤上的箭嘴與底座上的箭嘴。

   注意: 如果在安全切斷開關上未正確安裝盛油盤及水盤，本機將無法操作。
6. 將發熱線放在底座上。
7. 將燒烤盤放在發熱線上，將插頭接駁到電源接駁口。
8. 將插頭插入交流電壓220-240V~50/60Hz的獨立插座，燒烤爐已可使用。

   注意: 當第一次使用電烤爐，可能會出現少量冒煙及氣味約60秒;因為本產品在生產時帶有一層保護油，是正常現象。

   當燒烤爐運作時, 如取出發熱線時燒烤爐會自動停機。

Preparation Before Use:

1. Take apart all accessories, clean with a soft damp cloth. Place your appliance on the level and stable surface.
2. Make sure that all package materials are removed before use.
3. Place the Base on a flat, level surface.
4. Fill with tap water up to the fill line in the Water Tray and make sure the water level remains below the Heating Element and place in the bottom of the Base.

   (Note: Please do not drip water onto the Heating Element.)
5. Place the Grease Tray on the Base, aligning the arrows on the Grease Tray with the arrows on the Base.

   NOTE: The BBQ Grill will not operate if the Grease Tray and Water Tray are not installed correctly on the Safety Cut Off Switch.
6. Place the Heating Element on the Base.
7. Place the Grill Plate on the Heating Element, plug the power plug to the Power socket .
8. Plug the Power plug into an 220-240V~ 50/60Hz electrical outlet, The BBQ Grill is ready for use.

   NOTE: For first time operation, there will have some smoke or smell for about 60 seconds. Because this BBQ Grill have some protective oil on the surface during production.

   If the Heating Element is removed during the operation of BBQ Grill, the Grill will automatically shut down.

燒烤爐可使用控制面板按鍵操控。
The BBQ Grill may be operated by the control panel.

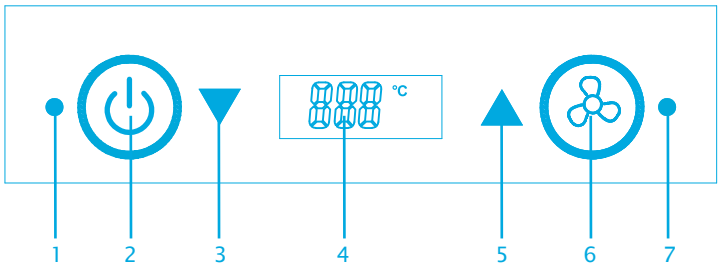

1. 電源指示燈 Power Indicator
2. 開關鍵 On/Off Key
3. 溫度減少鍵 Tempature Down
4. 溫度顯示屏 Temperature Display
5. 溫度增加鍵 Tempature Up
6. 風扇鍵 Fan Key
7. 風扇指示燈 Fan Indicator

1. 接通電源後，電源指示燈將閃爍，燒烤爐進入準備狀態。
1. Connect this BBQ grill to the power supply, the Power Indicator will flash on, and then it will stay in stand by mode.
2. 按開關鍵" ⏻ "，電源指示燈將亮起，溫度顯示屏會顯示"---"。
2. Press the On/Off Key" ⏻ " , the Power Indicator will light on, The Tempature Display will show"---".
3. 按溫度增加鍵"▲"或溫度減少鍵"▼" 增加或降低烹調溫度。長按該按鍵將迅速改變溫度(溫度控制範圍：100℃/120℃/160℃/180℃/200℃/230℃)。
3. Press the "▲" key to increase the cooking temperature and the "▼" key to decrease the cooking temperature. Keeping the key held down will rapidly change the temperature(Temperature control range: 100℃/120℃/160℃/180℃/200℃/230℃).
4. 按下 風扇鍵" ⊛ "，風扇指示燈亮起，風扇開始工作。
注意：在整個燒烤過程中，風扇應保持運行，以防止油脂積聚。
4. Press the Fan Key"⊛" , the Fan Indicator will light on, the fan starts to working. NOTE: Fan should be kept running throughout the grilling process to prevent grease build up.
5. 先將溫度設置為160℃，預熱6分鐘後開始放入食物，燒烤盤可加熱生熟食物。
5. Set temperature to 160℃ and preheating the BBQ Grill for 6 minutes, then place any food on Grill Plate under the heating sources according to different heat of cooking request.
6. 完成燒烤後，按電源鍵"⏻" 和風扇鍵"⊛"關閉燒烤爐並拔除電源插頭。待燒烤爐完全冷卻後方可清潔或移動機身。
6. When finished using the BBQ Grill, press the On/Off Key" ⏻ " and Fan Key "⊛"to turn off the BBQ Grill and unplug the power cord. Wait until the BBQ Grill is completely cool down before moving or cleaning.

注意：若於90分鐘內未進行任何操作(按任何操作鍵)，燒烤爐將會自動停止操作。
Cauction: The BBQ Grill will turn off automatically if no operation (press any key) within 90 minutes.

清理及維護
Maintenance

1. 清潔前應確保電烤爐處於冷卻狀態及從電源插座上拔下插頭。
1. Make sure the BBQ Grill is completely cooled down and the plug is removed from the power supply socket before cleaning.
2. 清潔時，應用濕軟的布團擦拭電烤爐的表面。如有難以擦拭的污垢，可使用日用的洗潔精進行擦拭，但不宜使用鋼絲球類狀物進行磨擦。
2. After the BBQ Grill is completely cooled down, clean it with the mild cleaner or gel-like cleaner by using soft cloth. DO NOT USE hard brushes, scratchy materials and/or alcohol, petrol or any organic cleaner for the cleaning purpose.
3. 當電烤爐發熱時, 切勿進行清潔。
3. PLEASED DO NOT CLEAN THE BBQ GRILL WHEN IT IS STILL HOT.
4. 請不要將發熱線、插頭及底座浸入到液體中進行清潔。水盤、盛油盤及燒烤盤可以直接進行清洗，方便衛生。
4. Do not immerse the Heating Element, Plug and Base in water to clean.
5. 不要浸泡燒烤盤。這可能會損壞不粘塗層。
5. Do not soak the Grill Plate. This could damage the non-stick coating.
6. 請勿拆除及清潔底座內的風扇。
6. Do not remove and clean the fan in the Base.
7. 清潔後放置在乾爽陰涼的地方。
7. Put the BBQ Grill on the cool place right after the cleaning.

小貼士
OPERATION TIPS

1. 請勿在沒有風扇的情況下使用燒烤爐，因為它會導致內部油脂堆積，並可能影響其操作的正確性。
1. Do not use the BBQ Grill without fan, because it will cause the accumulation of fat inside it and may affect the correctness of its operation.
2. 電烤爐使用時，必須放上食物，不可進行乾燒。此舉將嚴重縮短產品使用壽命。
2. Do not allow to turn on this BBQ Grill if you have not place any food on it.
3. 首次使用時，會有短暫時間的煙霧冒出，並有輕微異味。此種現象屬正常，請不用擔心。
3. For first time operation, there will have some smoke or smell. This situation happens properly. Don't worry about that.
4. 電烤爐使用時間較長後，表面顏色有所變化，這是正常現象。
4. If this BBQ Grill is using very long time, the surface of Grill will become fade, this situation also happens properly.

技術規格
Specifcation

無煙燒烤爐
Smokeless BBQ Grill

origo

型號 Model Number	EG7300
電源 Power Supply	220-240V~ 50/60Hz
額定功率 Rated Power	1500W
產品尺寸 Product Dimension	495 x 285 x 125 mm

源澤地圖
Origin Map

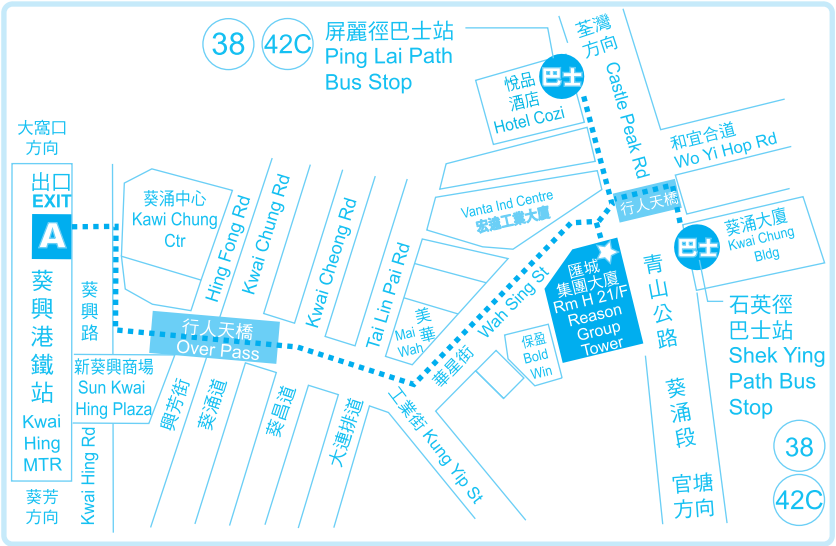

辦公時間
10:30am – 12:30pm (星期一至五)
02:30pm – 05:30pm (星期一至五)
10:30am – 12:30pm (星期六)
(星期日及公眾假期休息)

OFFICE HOURS
10:30am – 12:30pm (Mon to Fri)
02:30pm – 05:30pm (Mon to Fri)
10:30am – 12:30pm (Saturday)
(Closed on Sunday and Holiday)

產品保用証(一年自攜服務)

無煙燒烤爐
Smokeless BBQ Grill

產品: 無煙燒烤爐

型號: EG7300

此產品由購買日期起計算，本公司將根據下列條款及細則，提供一年保養服務(商業用享為3個月):

1. 於購買後一年內，經本公司技術員判斷為正常運作下損壞之產品，可獲免費維修和/或零件更換。
2. 以下情況不被包括在保養範圍內：
   - 若產品是因為濫用、錯誤使用、疏忽及/或意外而遭致損壞；
   - 未經授權之自行處理、維修及/或改裝；
   - 任何機殼、面蓋、燒烤盤、盛油盤、水盤，以及配件。
3. 需要檢查或維修時，請將產品送往本公司服務中心，並於修理妥當後自行取回。
4. 更換後之任何損壞零件，均屬本公司所有。
5. 本保養服務只適用於香港特別行政區。
6. 顧客必須同時出示零售商之正式發票，方可得到免費維修服務。

*** 額外3個月保用: 凡於購買產品後10天內完成網上登記，即可免費延長保用期3個月，即15個月免費保用(商業用途除外)。請即登入網站: www.origo.hk

服務中心
源澤市務有限公司
香港新界葵涌青山公路403號(近華星街12號)匯城集團大廈21樓H室
電話: 2156 8238
www.origo.hk

www.origo.hk

Find us on

Warranty Card(1 year carry-in)

Item : Smokeless BBQ Grill

Model : EG7300

This product is warranted for 1year (commercial use for 3 months) from the date of purchase under the following conditions:

1. For any defect, in the judgment of our technician, if it is caused under normal use, we are responsible for repairing the product, and/or replacing parts at free of charge.
2. This warranty DOES NOT apply to:
   - If the product has been damaged through abuse, misuse, negligence or accidents;
   - Unauthorized repair, alteration/modification;
   - The housing, cover, grill plate, grease tray, water tray or accessories, is excluded from this warranty.
3. The customer is requested to bring the unit to and from our Service Centre whenever service is needed.
4. Any defective parts, which had been replaced, shall be of our property.
5. This warranty is valid in H.K.S.A.R. only.
6. Please show the Invoice to get free service.

***Extra 3 months warranty: just complete Online Warranty Registration within 10 days from the date of receipt, free warranty will be extended to 15 months (not applicable to commercial use). Please enter our website: www.origo.hk

Service Centre
ORIGIN MARKETING LIMITED
Unit H, 21/F., Reason Group Tower (nearby 12 Wah Sing Street), 403 Castle Peak Road, Kwai Chung, N.T., Hong Kong.
Tel: 2156 8238
www.origo.hk

www.origo.hk

Find us on